PART NUMBER	"U"	"L"	"F"
81-12-040-XX	.133	.225	.325
81-12-060-XX	.153	.245	.345
81-12-080-XX	.173	.265	.365
81-12-100-XX	.193	.285	.385
81-12-120-XX	.213	.305	.405
81-12-140-XX	.233	.325	.425
81-12-160-XX	.253	.345	.445
81-12-180-XX	.273	.365	.465
81-12-200-XX	.293	.385	.485
81-12-220-XX	.313	.405	.505
81-12-240-XX	.333	.425	.525
81-12-260-XX	.353	.445	.545
81-12-280-XX	.373	.465	.565
81-12-300-XX	.393	.485	.585
81-12-320-XX	.413	.505	.605
81-12-340-XX	.433	.525	.625
81-12-360-XX	.453	.545	.645
↓	↓	↓	↓
81-12-580-XX	.673	.765	.865

NOTES:
1. MATERIAL: XX
   16-CASE HARDENED STEEL
   20-STAINLESS STEEL
2. FINISH: XX
   16-ZINC PLATE, CHROMATE PLUS SEALER
   20-PASIVATED.
3. INSTALLATION INSTRUCTIONS:
   A. PREPARE Ø.188 HOLE IN OUTER PANEL.
   B. INSERT STUD AND ADD RETAINER.

REVISION HISTORY			
REV	DATE	BY	DESCRIPTION
N	17DEC2019	CMS/JCG	PRN: P2019-3053

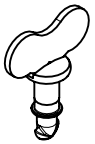

SCALE 1:1

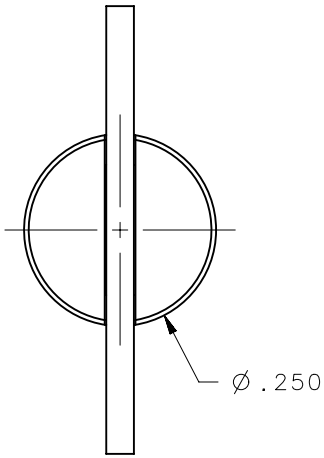

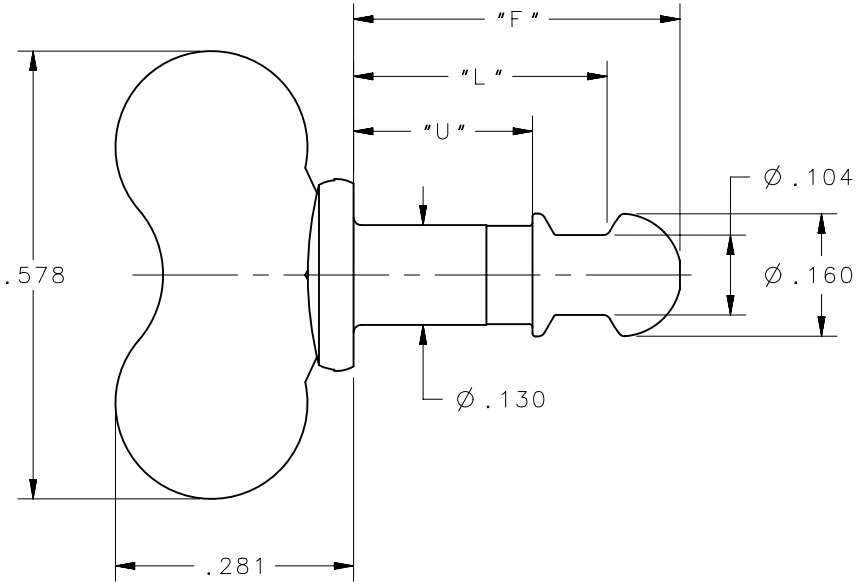

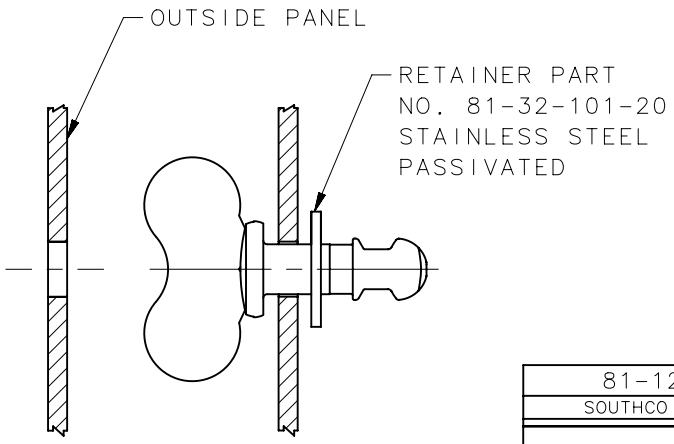

INSTALLATION
SCALE 2:1

81-12-XXX-XX	WING HEAD STUD	SEE NOTE 1	SEE NOTE 2
SOUTHCO PART NUMBER	TYPE OF COMPONENT	MATERIAL	FINISH

THIRD ANGLE PROJECTION

INCHES [MM]

TOLERANCES UNLESS OTHERWISE NOTED

ALL DIMENSIONS WITHOUT TOLERANCES ARE FOR REFERENCE ONLY.

PER ASME Y14.5M-1994

SURFACE AREA

VOLUME

PROPRIETARY ITEM

EXCEPT FOR USES EXPRESSLY GRANTED IN WRITING, INFORMATION DISCLOSED HEREON IS CONFIDENTIAL AND ALL RIGHTS, PATENT AND OTHERWISE, ARE RESERVED BY SOUTHCO, INC.

southco®
CONNECT·CREATE·INNOVATE

DESCRIPTION: NO. 81 WING HEAD STUD

SIZE	SYSTEM	DWG NO.		
A	NX	J-81-12-16		
DRAWN BY	DATE	SCALE	SHEET	
RHB	07SEP1973	4:1	1 OF 1	