REVISION HISTORY			
REV	DATE	BY	DESCRIPTION
D	07APR2021	ABK/VK	PRN: P2021-0655

R4-30-4 [I] -10 [B] -M

[I] MOUNTING OPTION
0 6.7 mm THRU HOLE
1 1/4-20 THREAD
2 M6 THREAD

[B] LATCHING
1 STANDARD
5 INTEGRATED BUMPER

[M] MATERIAL
20 STAINLESS STEEL, PASSIVATED

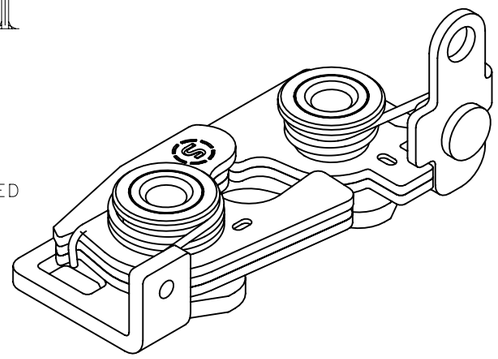

R4-30-4[I]-101-20
(STANDARD)

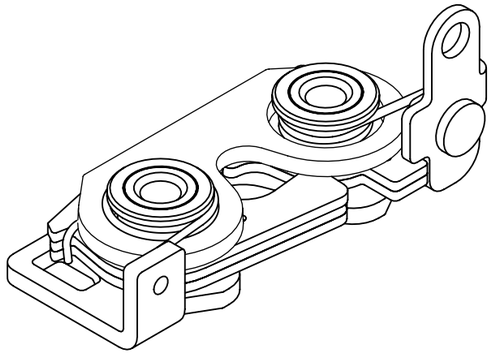

R4-30-4[I]-105-20
(INTEGRATED BUMPER)

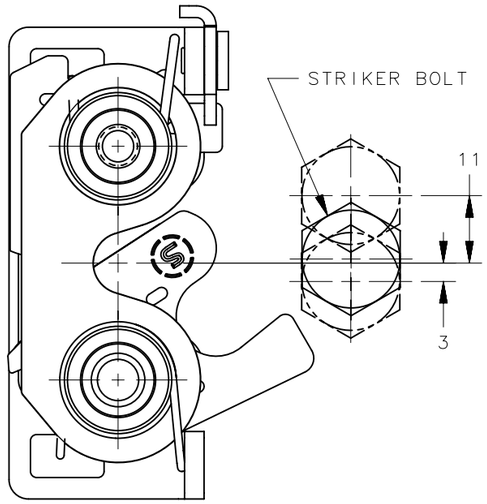

MISALIGNMENT VIEW
(SEE NOT B)

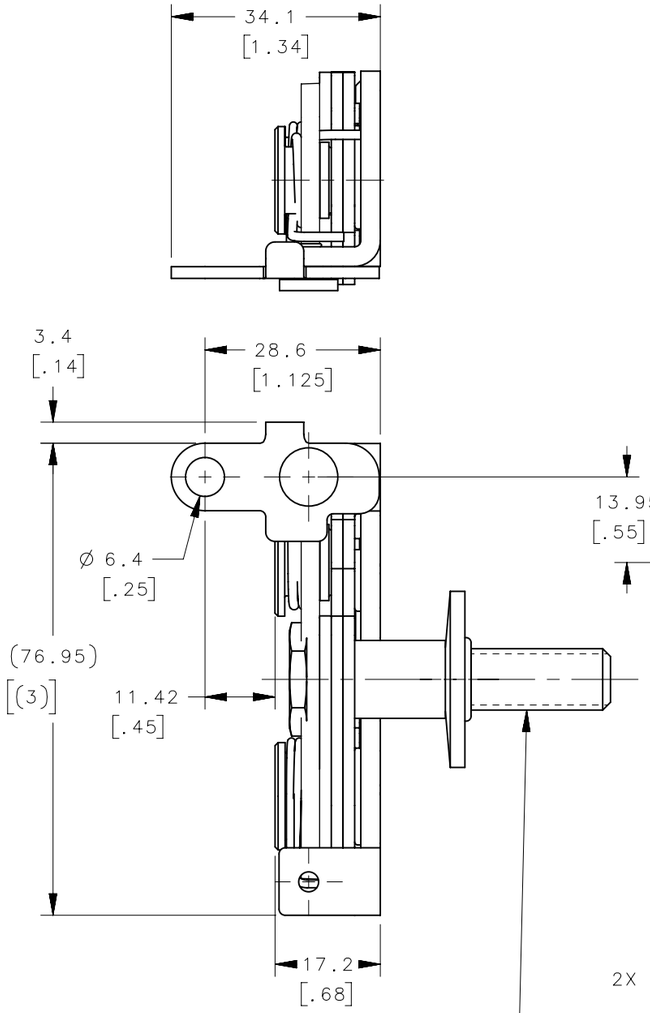

STRIKER BOLT ASSEMBLY
(SOLD SEPARATELY)
SEE J-R4-90-321
FOR DETAILS

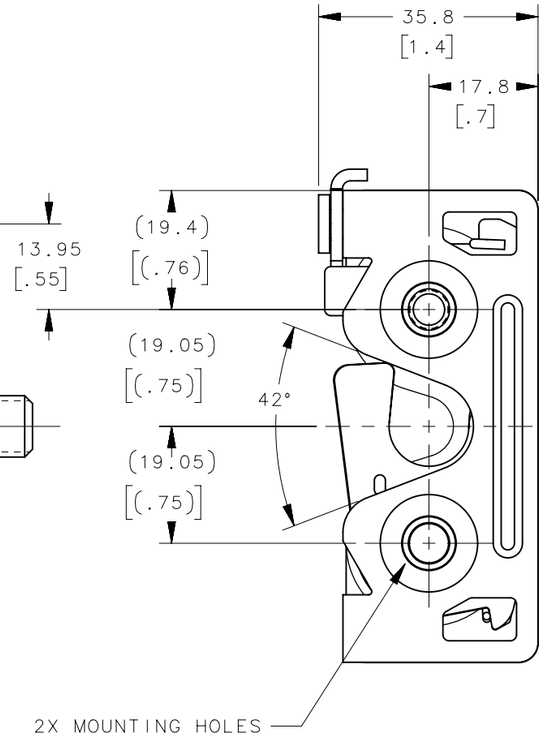

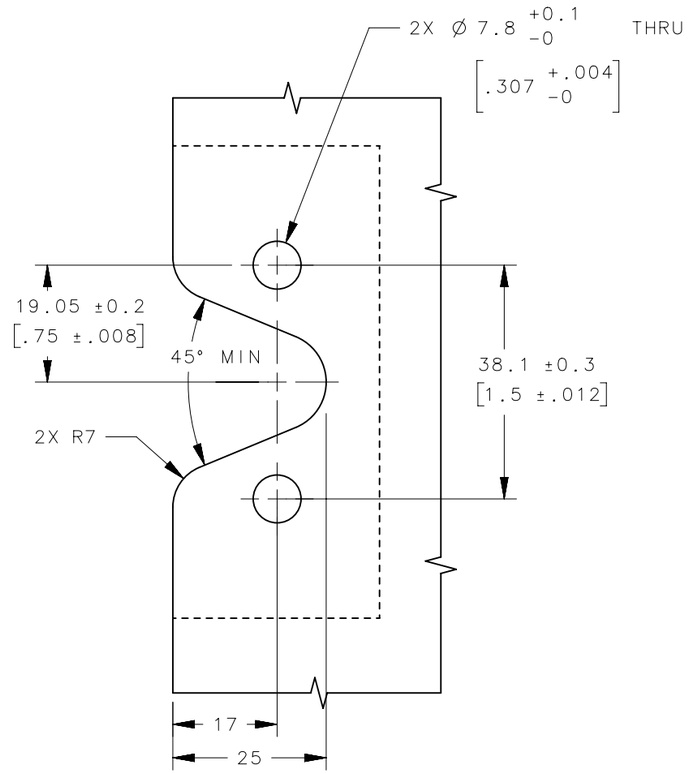

PANEL PREPARATION

NOTES:

A. MATERIAL AND FINISH:

- HOUSING, LEVER AND INTERNAL COMPONENTS: STAINLESS STEEL, PASSIVATED
- PAWL AND TRIGGER: STAINLESS STEEL, PASSIVATED
- SPRING: STAINLESS STEEL, PASSIVATED

B. THE MISALIGNMENT VIEW ASSUMES THE LATCH IS CONNECTED TO A PERFECTLY RIGID DOOR AND HINGE; THEREFORE, THERE IS NO DOOR AND/OR HINGE SLACK ASSOCIATED WITH THESE DIMENSIONS, THE MISALIGNMENT VIEW DOES NOT TAKE FLEXING OF THE STRIKER BOLT INTO ACCOUNT.

SURFACE AREA

VOLUME

PROPRIETARY ITEM

EXCEPT FOR USES EXPRESSLY GRANTED IN WRITING, INFORMATION DISCLOSED HEREON IS CONFIDENTIAL AND ALL RIGHTS, PATENT AND OTHERWISE, ARE RESERVED BY SOUTHCO, INC.

THIRD ANGLE PROJECTION

MILLIMETERS [IN]

TOLERANCES UNLESS OTHERWISE NOTED

ALL DIMENSIONS WITHOUT TOLERANCES ARE FOR REFERENCE ONLY.

PER ASME Y14.5M-1994

southco®
CONNECT·CREATE·INNOVATE

DESCRIPTION: R4 LATCH ASSEMBLY - PERPENDICULAR LEFT HAND ACTUATION STAINLESS STEEL

SIZE	SYSTEM	DWG NO.	
A3	NX	J-R4-30-40-101-20	
DRAWN BY YK/ACH	DATE 14OCT2014	SCALE 1:1	SHEET 1 OF 1