REVISION HISTORY			
REV	DATE	BY	DESCRIPTION
D	01APR2021	ABK/VK	PRN: P2021-0645

R4-30-4 [I] -10 [B] -M

[I] MOUNTING OPTION
- 0 6.7 mm THRU HOLE
- 1 1/4-20 THREAD
- 2 M6 THREAD

[B] LATCHING
- 1 STANDARD
- 5 INTEGRATED BUMPER

[M] MATERIAL
- 10 STEEL, ZINC PLATED
- 15 STEEL, BLACK ZINC NICKEL PLATED
- 77 STEEL, ZINC NICKEL PLATED

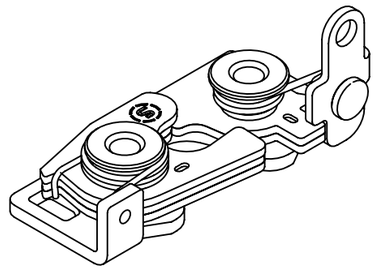

R4-30-4[I]-101-M
(STANDARD)

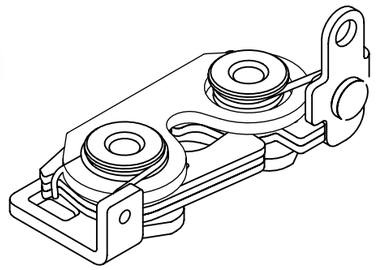

R4-30-4[I]-105-M
(INTEGRATED BUMPER)

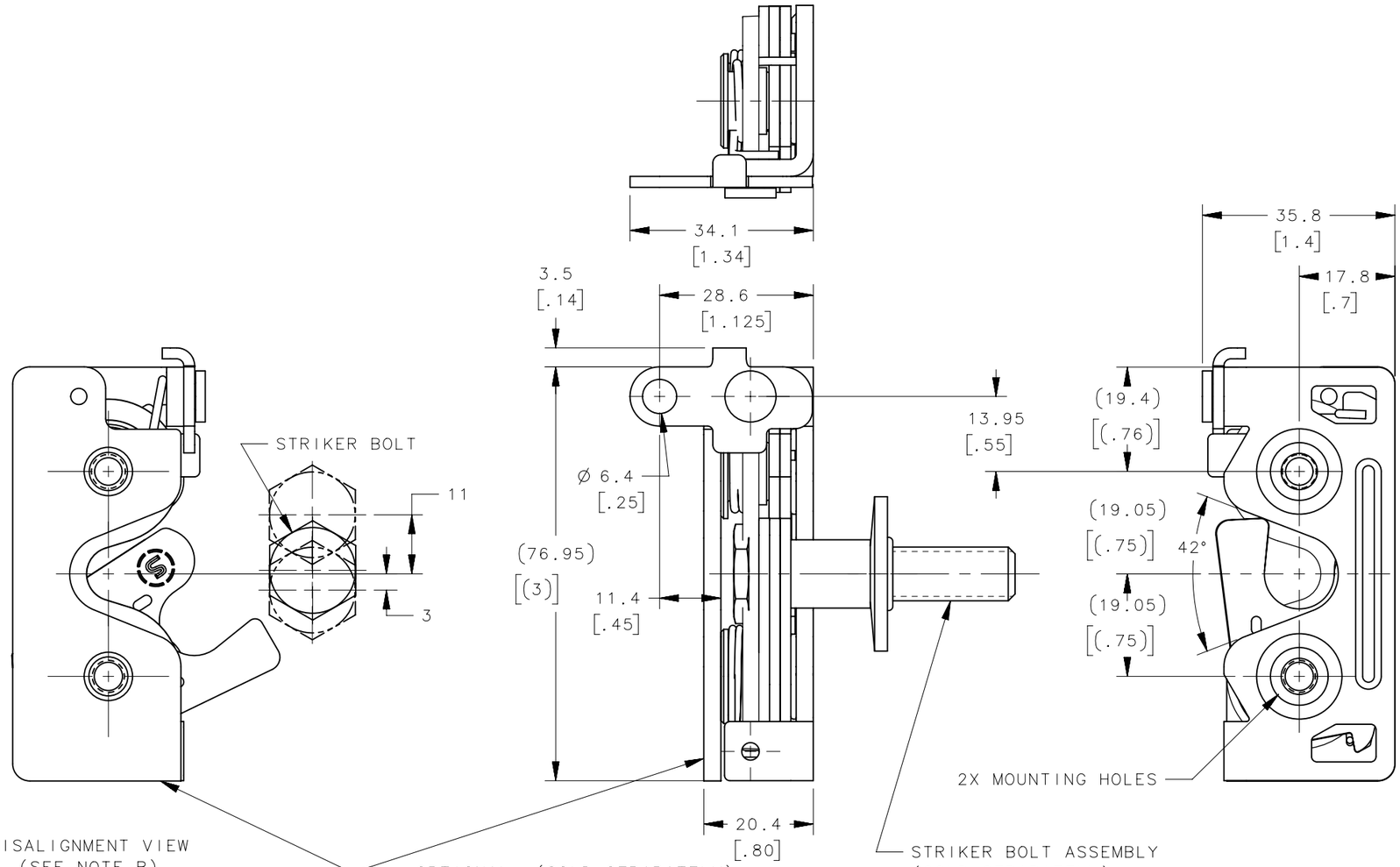

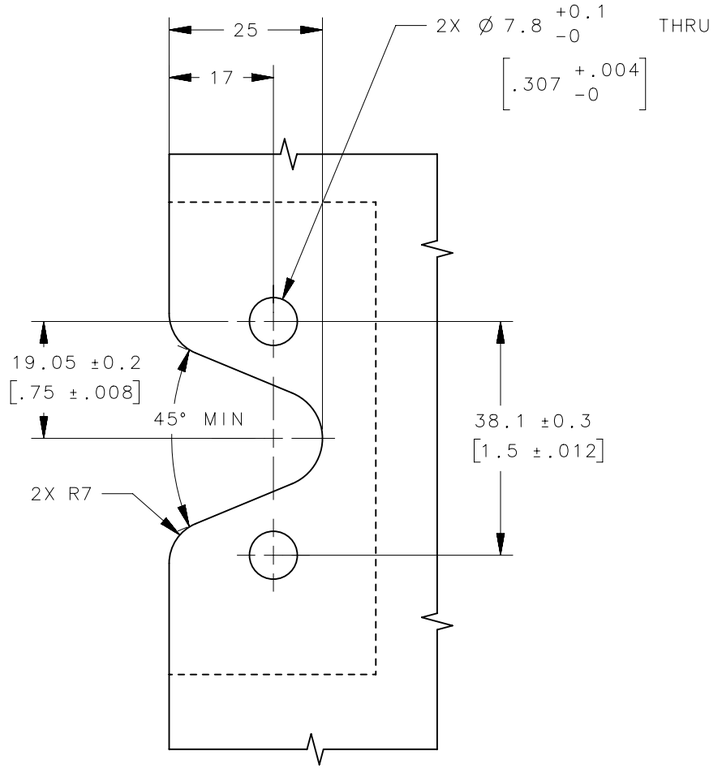

PANEL PREPARATION

NOTES:

A. MATERIAL AND FINISH:

- HOUSING, LEVER AND INTERNAL COMPONENTS: STEEL
- PAWL AND TRIGGER: HARDENED STEEL,
- SPRING: STAINLESS STEEL, PASSIVATED

B. THE MISALIGNMENT VIEW ASSUMES THE LATCH IS CONNECTED TO A PERFECTLY RIGID DOOR AND HINGE; THEREFORE, THERE IS NO DOOR AND/OR HINGE SLACK ASSOCIATED WITH THESE DIMENSIONS, THE MISALIGNMENT VIEW DOES NOT TAKE FLEXING OF THE STRIKER BOLT INTO ACCOUNT.

	THIRD ANGLE PROJECTION	southco® CONNECT·CREATE·INNOVATE
	MILLIMETERS [IN]	
SURFACE AREA	TOLERANCES UNLESS OTHERWISE NOTED	DESCRIPTION: R4 LATCH ASSEMBLY - PERPENDICULAR LEFT HAND ACTUATION
VOLUME	ALL DIMENSIONS WITHOUT TOLERANCES ARE FOR REFERENCE ONLY.	SIZE A3 / SYSTEM NX / DWG NO. J-R4-30-40-101
PROPRIETARY ITEM		
EXCEPT FOR USES EXPRESSLY GRANTED IN WRITING, INFORMATION DISCLOSED HEREON IS CONFIDENTIAL AND ALL RIGHTS, PATENT AND OTHERWISE, ARE RESERVED BY SOUTHCO, INC.	PER ASME Y14.5M-1994	DRAWN BY ACH/CMS / DATE 18JUN2013 / SCALE 1:1 / SHEET 1 OF 1